#

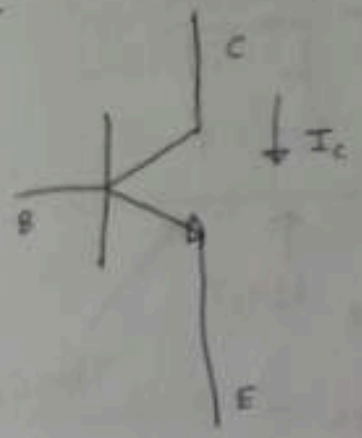

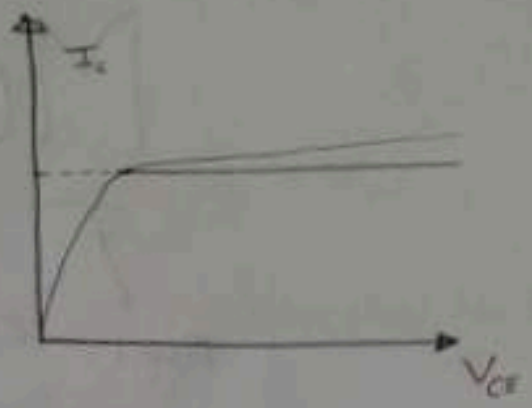

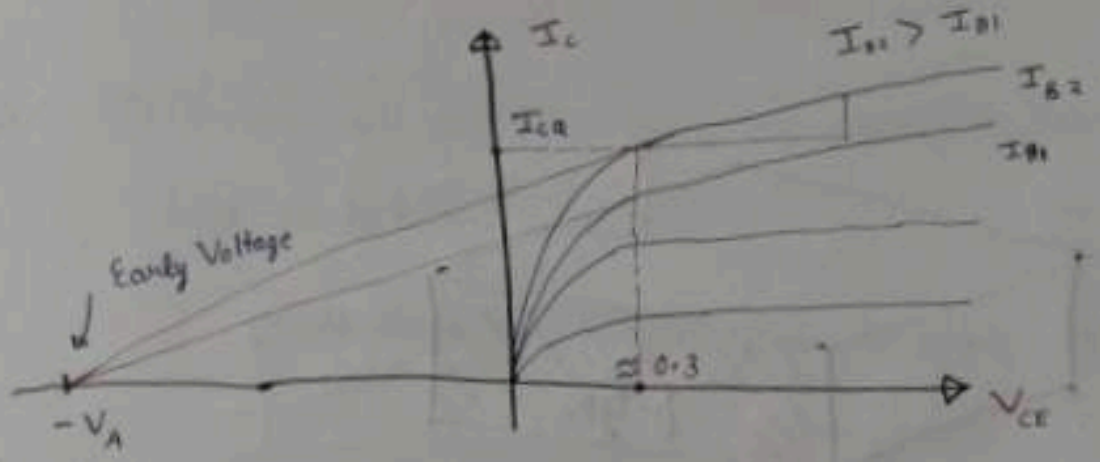

$\approx -60V$

$$\frac{\Delta I_c}{\Delta V_{CE}} = \text{slope} = \frac{I_{CQ}}{V_A + 0.3} \approx \frac{I_{CQ}}{V_A}$$

$$\frac{\Delta V_{CE}}{\Delta I_c} = \frac{V_A}{I_{CQ}} = r_o$$

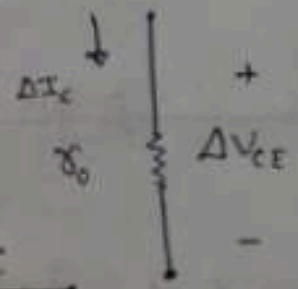

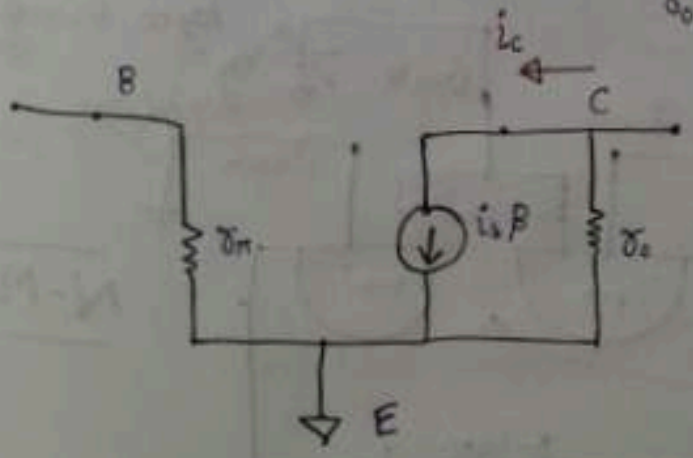

$$r_o = \frac{V_A}{I_{CQ}} = \frac{60V}{1mA} \approx 60K\Omega$$

MOSFET

Metal Oxide Semiconductor Field Effect Transistor

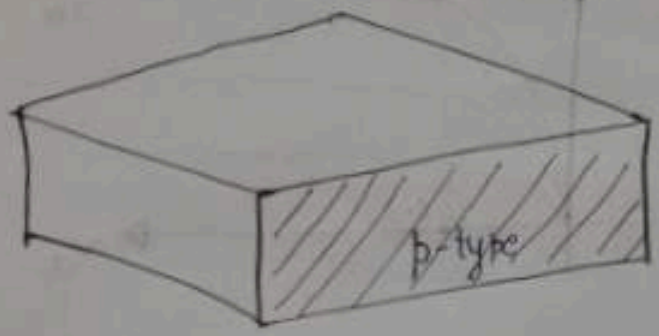

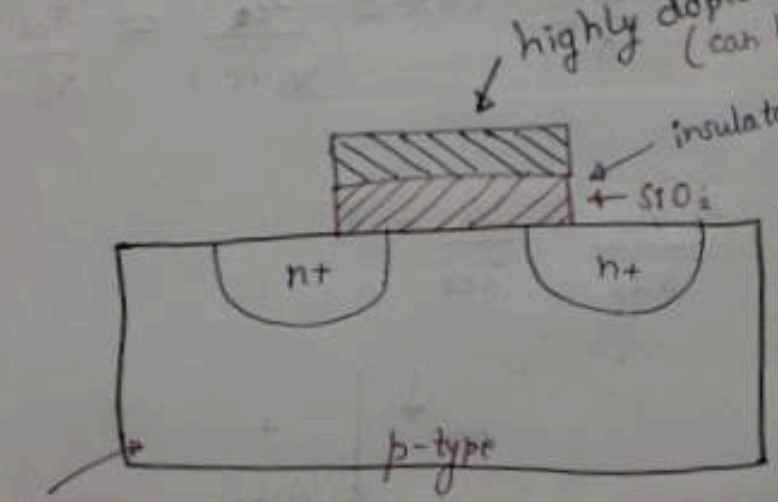

n+ ≡ highly doped compared to substrate

⇒ very thin depletion layer towards light doped one.

lightly-doped

[temporarily n-type]

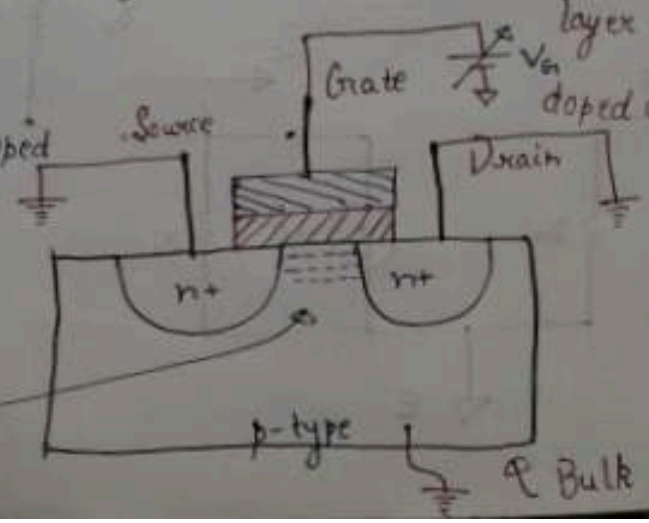

N-MOS

CMOS => NMOS + PMOS

- Channel is going to be formed when $V_G > V_{TH}$

  V_{TH} → Threshold Voltage

  (Bulk always at lowest potential)

- To ensure all pn junctions are always in reverse bias condition.

  (Bulk terminal is connected to lowest potential)

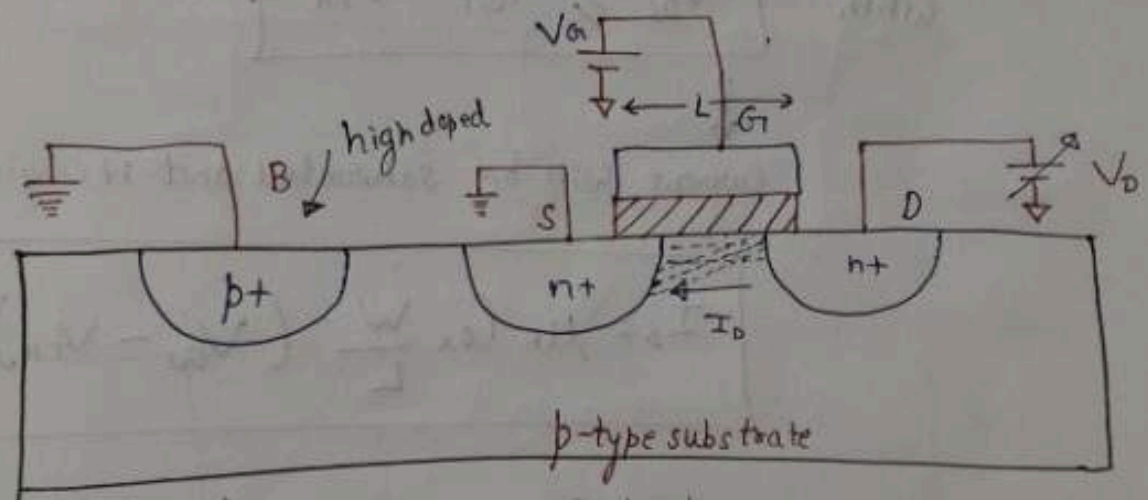

(tappered channel)

$$I_D = \mu_n C_{ox} \frac{W}{L} \left\{ (V_{GS} - V_{TH}) V_{DS} - \frac{1}{2} V_{DS}^2 \right\}$$

W → width of gate

L → length of gate

As $V_D \uparrow$ $V_{GD} \downarrow$

C_{ox} → Capacitance per unit area

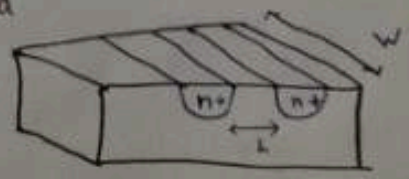

$\mu_n \equiv$ mobility of electrons

$C_{ox} \equiv$ Capacitance per unit area

As $V_D \uparrow$, when $\cancel{V_{DS}} = \boxed{V_{GS} - V_{DS} = V_{TH}}$

then channel will be pinched off near the drain

As $V_D \uparrow$ more, I_D becomes independent of V_{DS} & hence constant

(saturation)

when $\boxed{V_{DS} \geq V_{GS} - V_{TH}}$

$\downarrow$

current will be saturated and it is given by

$$\boxed{I_D = \mu_n C_{ox} \frac{W}{L} (V_{GS} - V_{TH})^2}$$

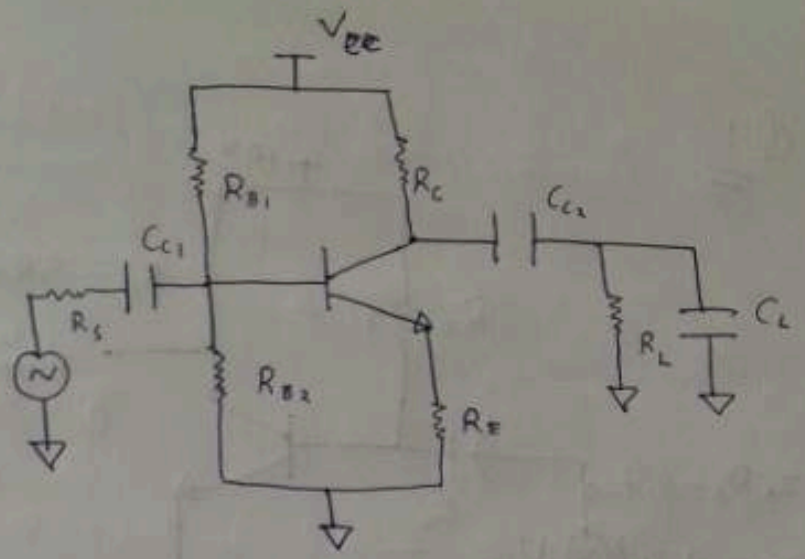

$\Rightarrow$

$$R_{TH} = R_{B1} \parallel R_{B2}$$

$$V_{TH} = \frac{R_{B2} V_{CC}}{R_{B1} + R_{B2}}$$

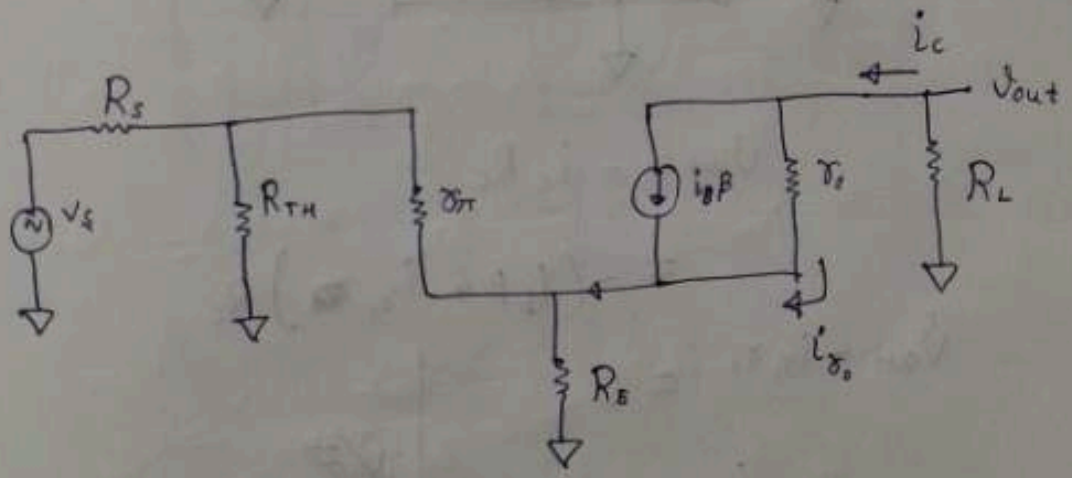

$$i_c = \beta i_b + i_{r_o} \Rightarrow v_{out} = -i_c R_L$$

$$v_{out} = -(\beta i_b + i_{r_o}) R_L$$

$$v_{out} - i_{r_o} r_o - i_e R_E = 0$$

$$v_{out} - i_{r_o} r_o - ((1+\beta) i_b + i_{r_o}) R_E = 0$$

Symbol of MOSFET

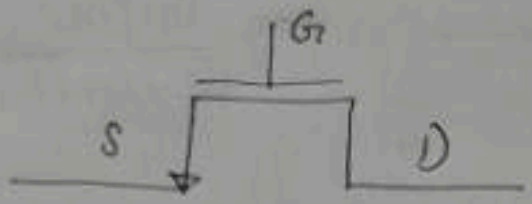

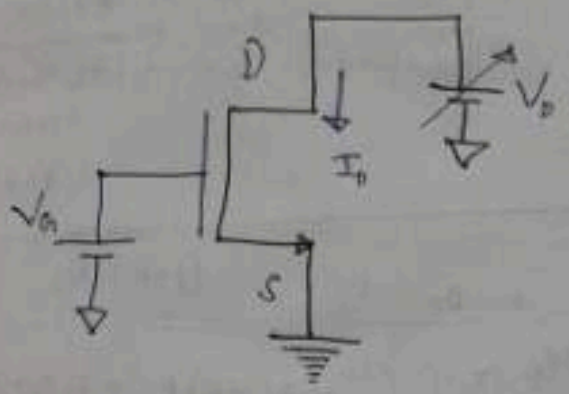

Cutoff region:

$I_D = 0$, when $V_{GS} < V_{TH}$

Linear region:

$$I_D = \mu_n C_{ox} \frac{W}{L} \left\{ (V_{GS} - V_{TH}) V_{DS} - \frac{1}{2} V_{DS}^2 \right\}$$

$(V_{GS} > V_{TH})$

when $V_{DS} < V_{GS} - V_{TH}$

Saturation region:

$$I_D = \mu_n C_{ox} \frac{W}{L} \left\{ (V_{GS} - V_{TH})^2 \right\}$$

when $V_{DS} \geq V_{GS} - V_{TH}$

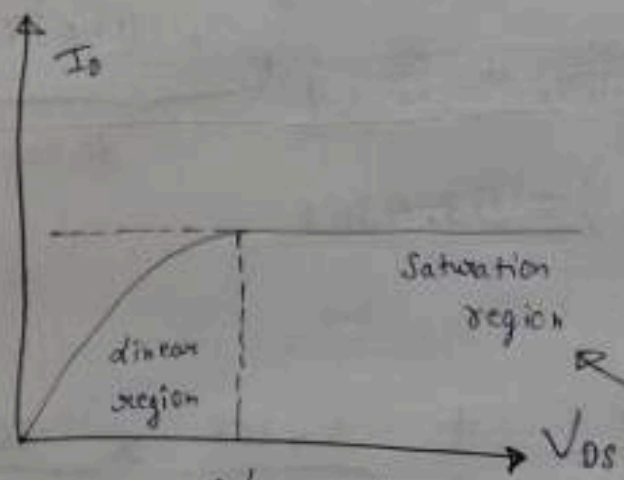

$V_{DS} = V_{GS} - V_{TH}$

(amplifier discussion in saturation region)

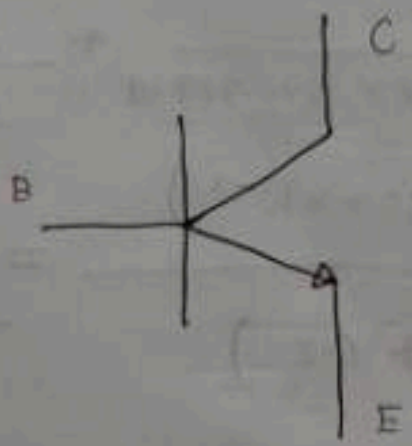

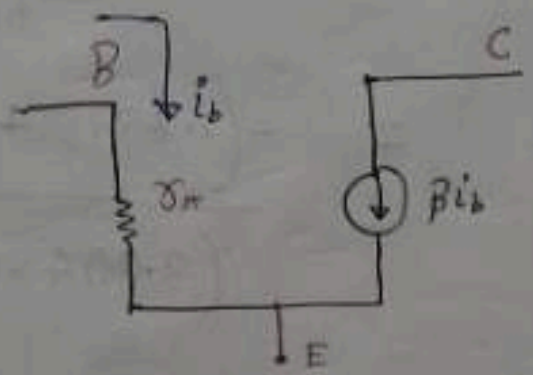

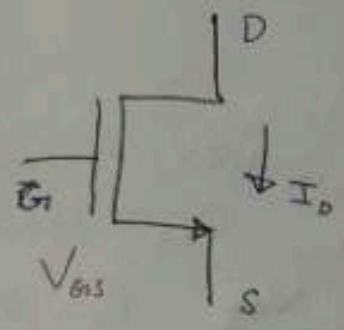

$$I_D = \frac{1}{2}\mu_n C_{ox}\frac{W}{L}\left(V_{GS} - V_{TH}\right)^2$$

(more like a voltage dependent current source)

$$\frac{dI_D}{dV_{GS}} = \mu_n C_{ox}\frac{W}{L}\left(V_{GS} - V_{TH}\right)$$

$$= \mu_n C_{ox}\frac{W}{L}\sqrt{\frac{2 I_D}{\mu_n C_{ox}\frac{W}{L}}}$$

$$g_m = \boxed{\frac{i_d}{v_{gs}} = \frac{dI_D}{dV_{GS}} = \sqrt{2\mu_n C_{ox}\frac{W}{L} I_D}}$$

transconductance

(as voltage is across G & S & current is I_D)

$$i_d = g_m v_{gs}$$

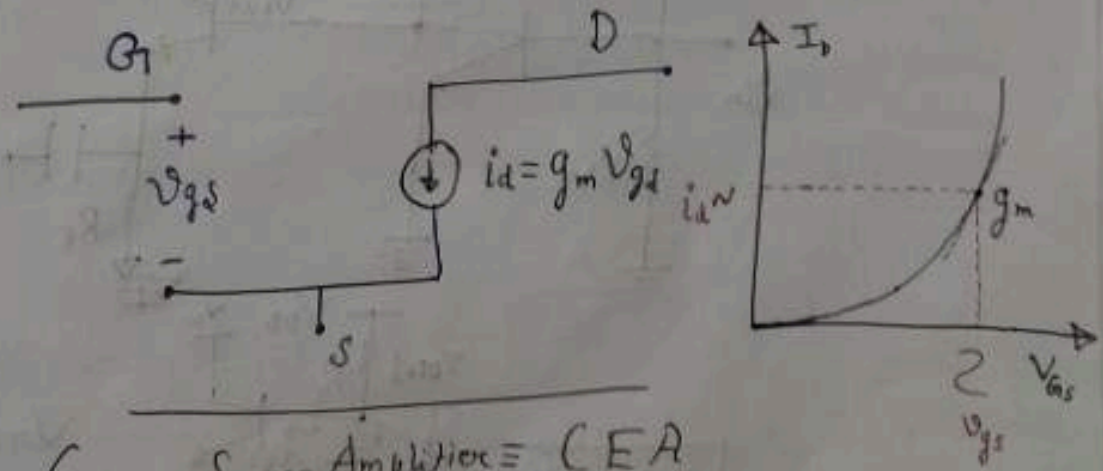

Common Source Amplifier ≡ CEA